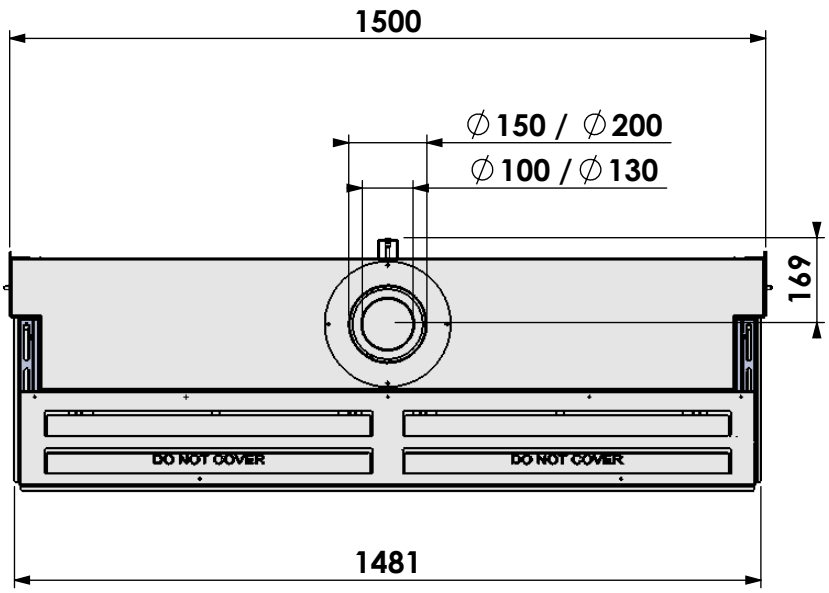

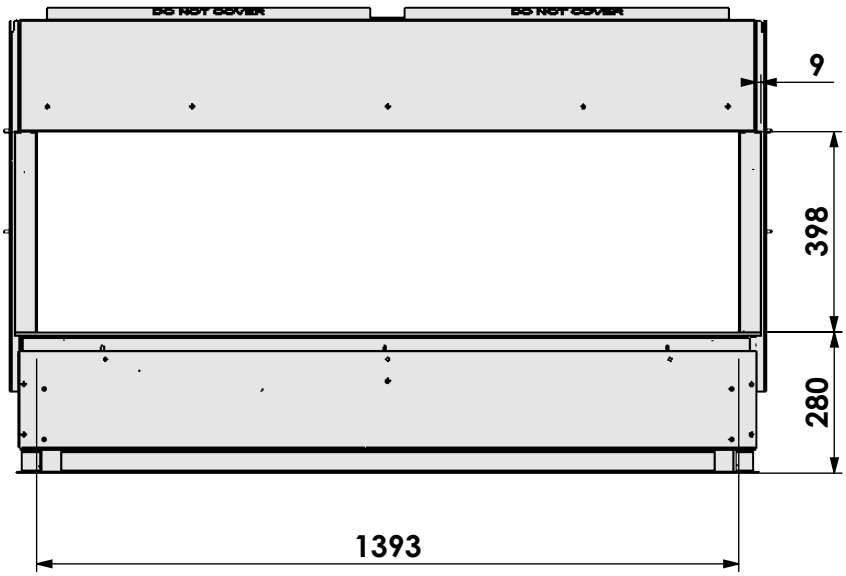

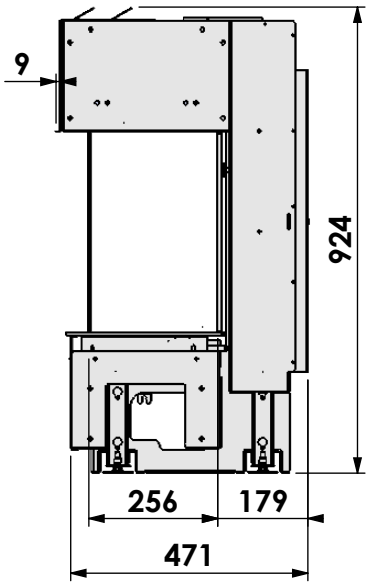

Kader 4 cm
4 cm Frame
Cadre 4cm
Rahmen 4cm

barbas.

Barbas Bellfires B.V.
Hallenstraat 17
5531 AB Bladel
The Netherlands
www.barbasbellfires.com

Name: Barbas Gas Panorama 140-40

Modifications reserved

Projection: American

Scale: 1:10

Unit: mm

Version: 0

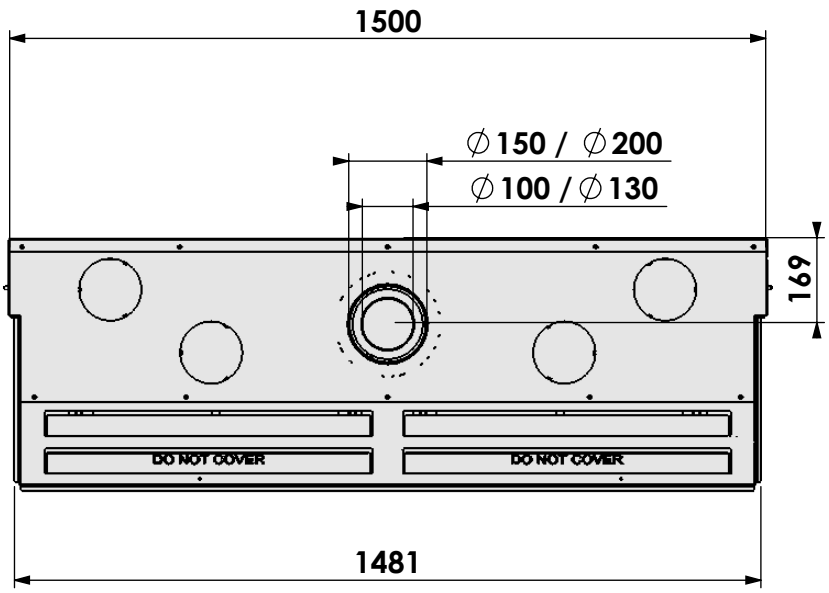

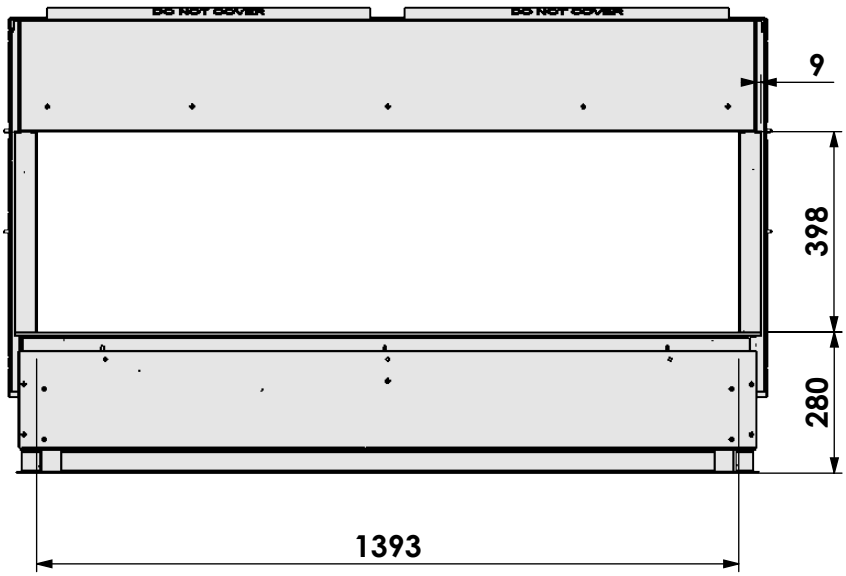

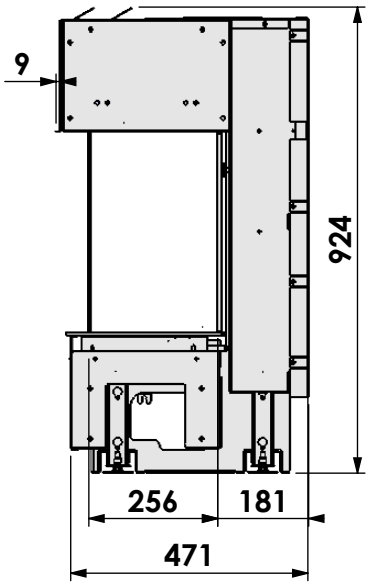

Kader 4 cm met convectiekast
4 cm Frame with convection housing
Cadre 4cm avec caisse convection
Rahmen 4cm mit konvektion Kasten

barbas.
Barbas Bellfires B.V.
Hallenstraat 17
5531 AB Bladel
The Netherlands
www.barbasbellfires.com

Name: Barbas Gas Panorama 140-40

Modifications reserved

Projection: American

Scale: 1:10

Unit: mm

Version: 0

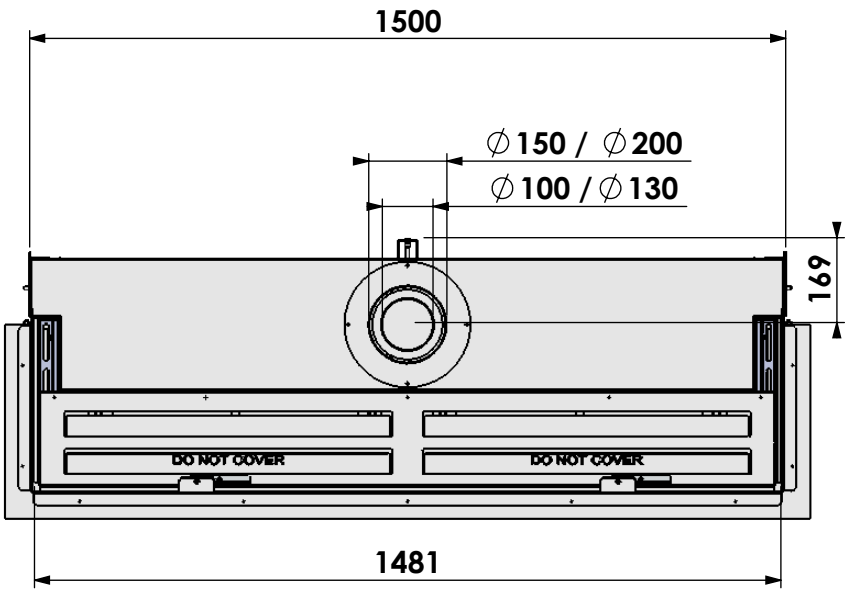

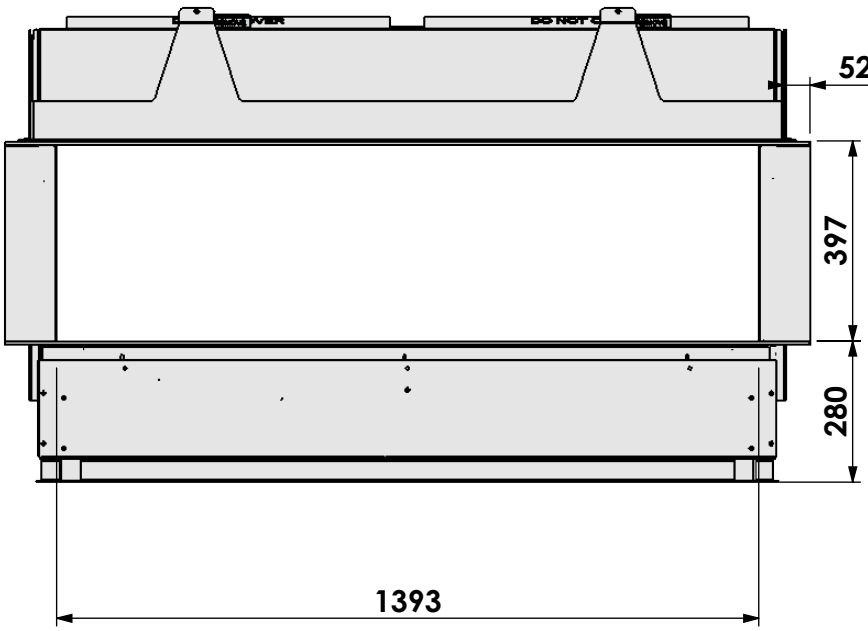

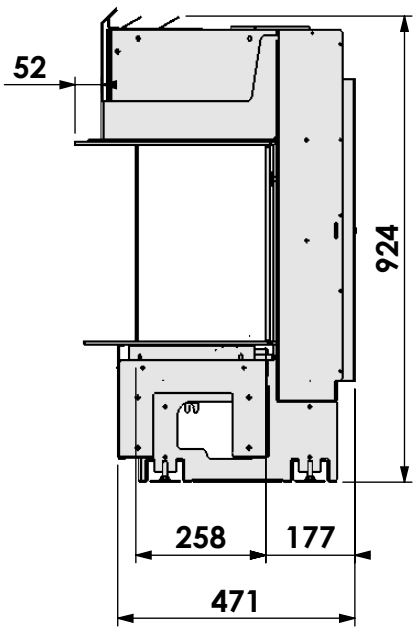

Kader 10 cm
10 cm Frame
Cadre 10 cm
Rahmen 10 cm

barbas.
Barbas Bellfires B.V.
Hallenstraat 17
5531 AB Bladel
The Netherlands
www.barbasbellfires.com

Name: Barbas Gas Panorama 140-40

Modifications reserved

Projection: American

Scale: 1:10

Unit: mm

Version: 0

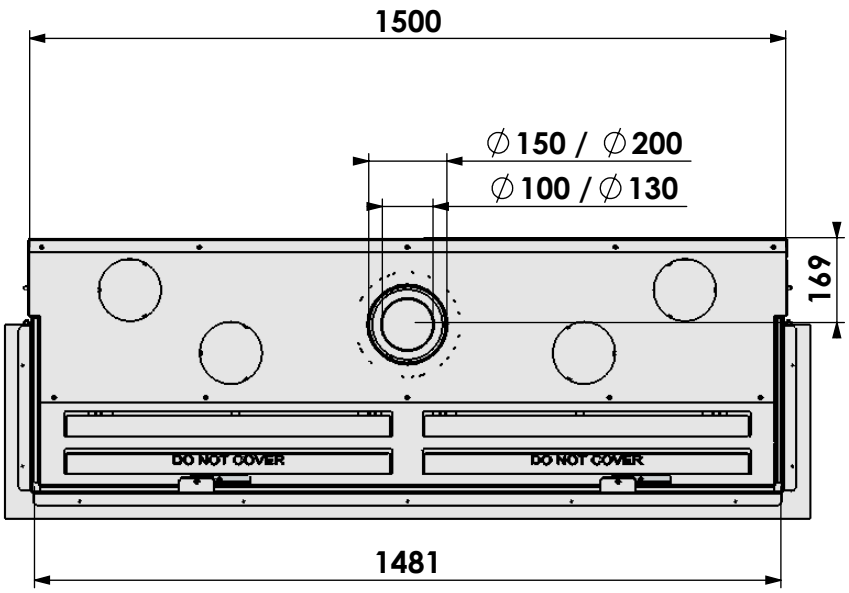

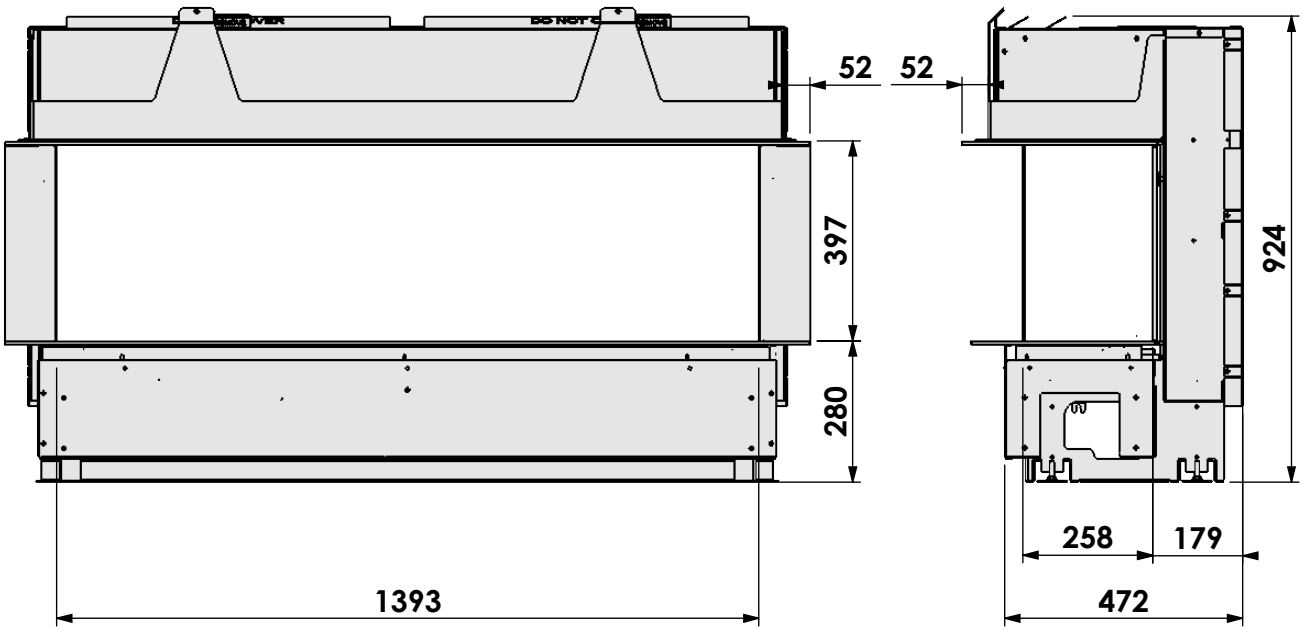

Kader 10 cm met convectiekast
10 cm Frame with convection housing
Cadre 10 cm avec caisse convection
Rahmen 10 cm mit konvektion Kasten

barbas.
Barbas Bellfires B.V.
Hallenstraat 17
5531 AB Bladel
The Netherlands
www.barbasbellfires.com

Name: Barbas Gas Panorama 140-40

Modifications reserved

Projection: American

Scale: 1:10

Unit: mm

Version: 0

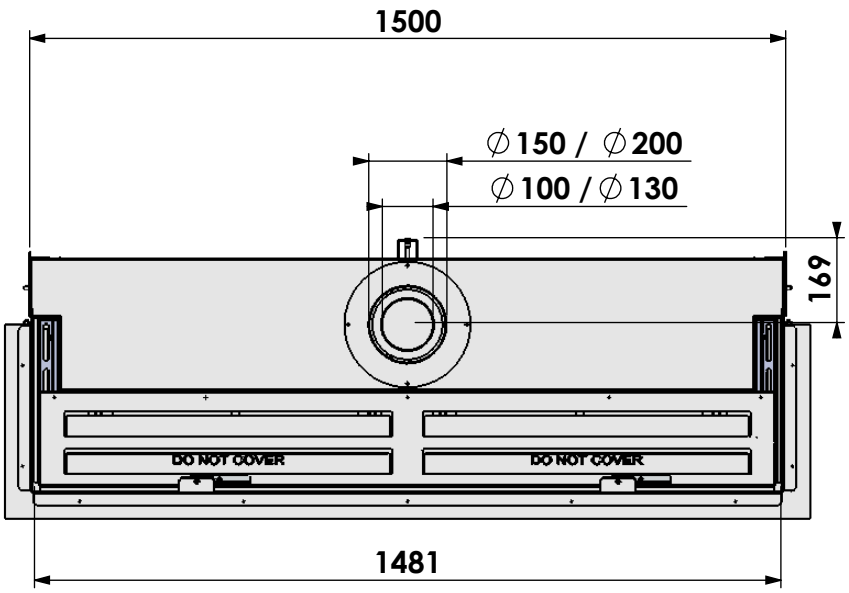

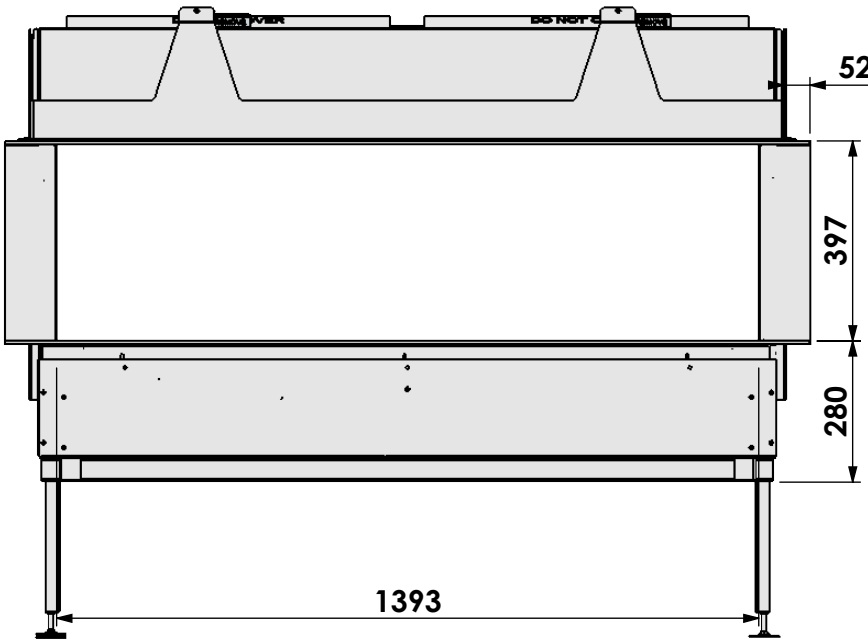

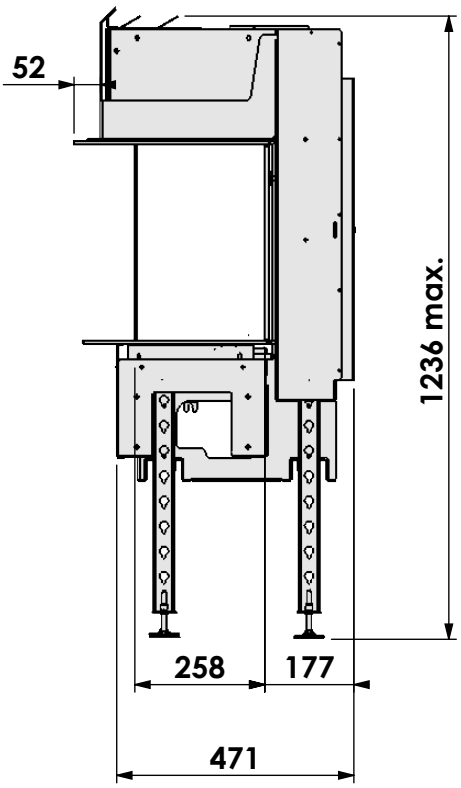

Kader 10 cm met verlengde potenset
10 cm Frame with adjustable legs
Cadre 10 cm avec set de pieds réhaussés
Rahmen 10 cm mit hohe Stellfüße

barbas.
Barbas Bellfires B.V.
Hallenstraat 17
5531 AB Bladel
The Netherlands
www.barbasbellfires.com

Name: Barbas Gas Panorama 140-40

Modifications reserved

Projection: American

Scale: 1:10

Unit: mm

Version: 0

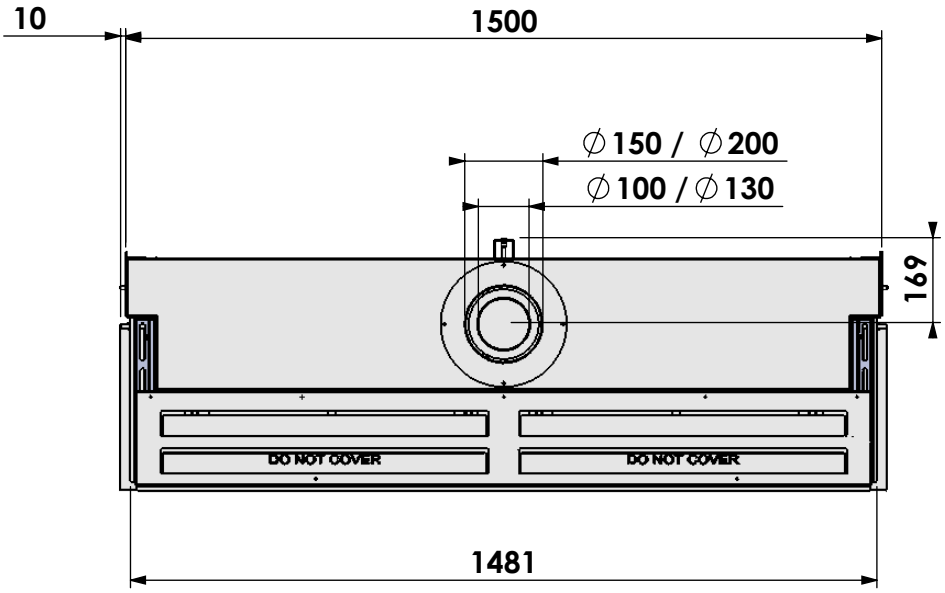

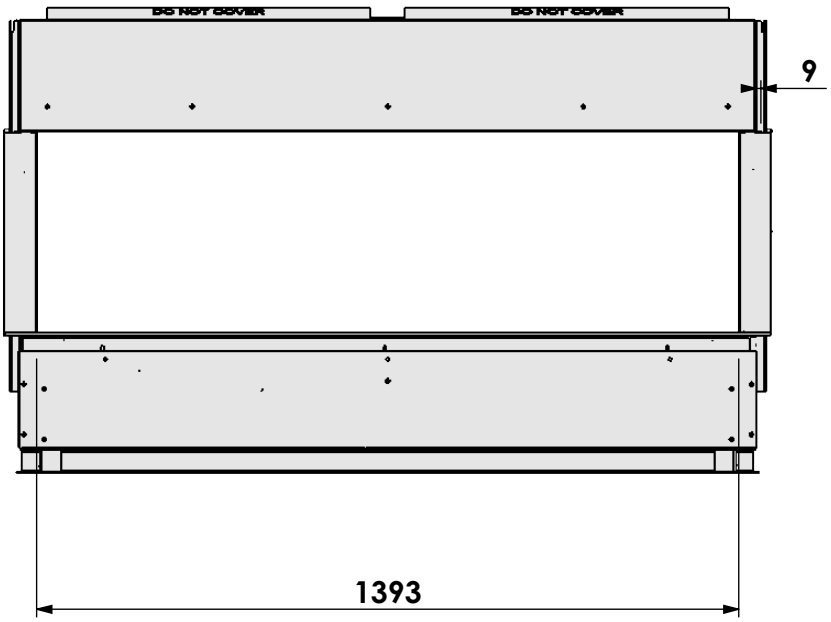

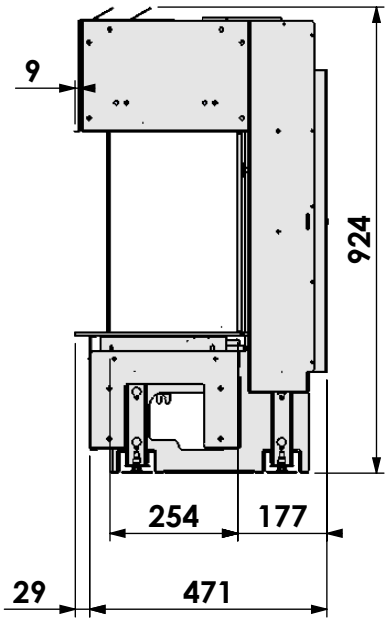

Kader 6 cm
6 cm Frame
Cadre 6 cm
Rahmen 6 cm

barbas.
Barbas Bellfires B.V.
Hallenstraat 17
5531 AB Bladel
The Netherlands
www.barbasbellfires.com

Name: Barbas Gas Panorama 140-40

Modifications reserved

Projection: American

Scale: 1:10

Unit: mm

Version: 0

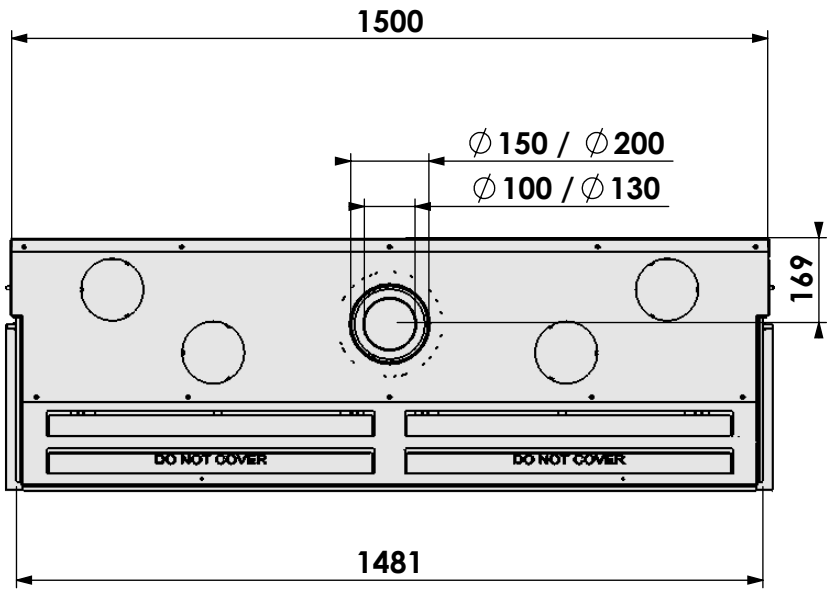

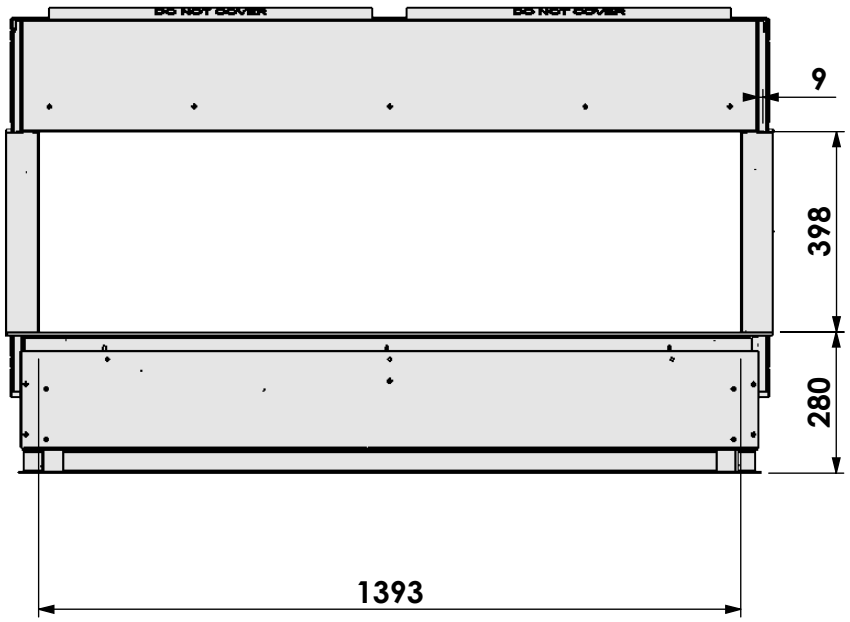

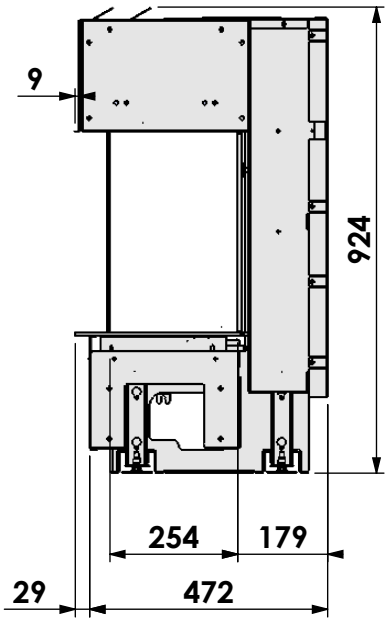

Kader 6 cm met convectiekast
6 cm Frame with convection housing
Cadre 6 cm avec caisse convection
Rahmen 6 cm mit konvektion Kasten

barbas.
Barbas Bellfires B.V.
Hallenstraat 17
5531 AB Bladel
The Netherlands
www.barbasbellfires.com

Name: Barbas Gas Panorama 140-40

Modifications reserved

Projection: American

Scale: 1:10

Unit: mm

Version: 0

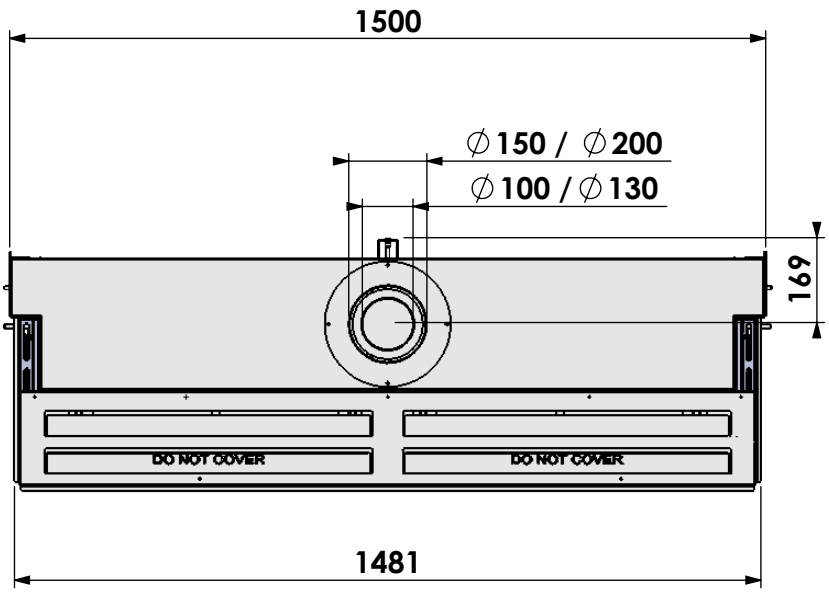

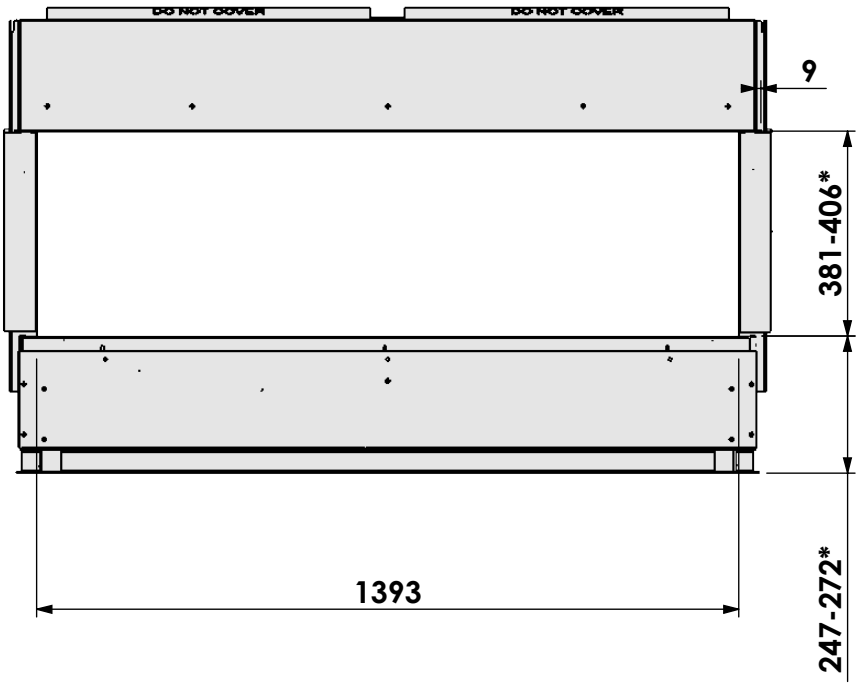

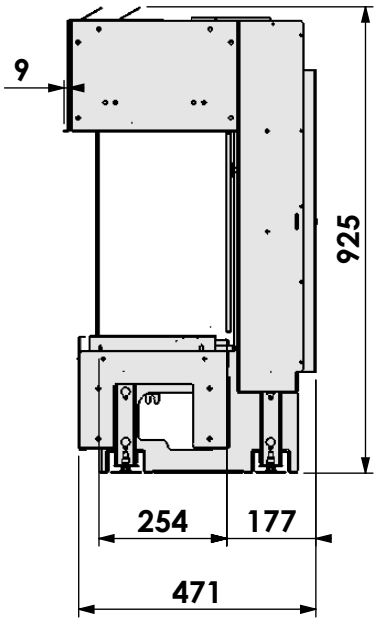

* = Adjustable

Kaderloos
Frameless
Sans cadre
Ohne Rahmen

barbas.
Barbas Bellfires B.V.
Hallenstraat 17
5531 AB Bladel
The Netherlands
www.barbasbellfires.com

Name: Barbas Gas Panorama 140-40

Modifications reserved

Projection: American

Scale: 1:10

Unit: mm

Version: 0

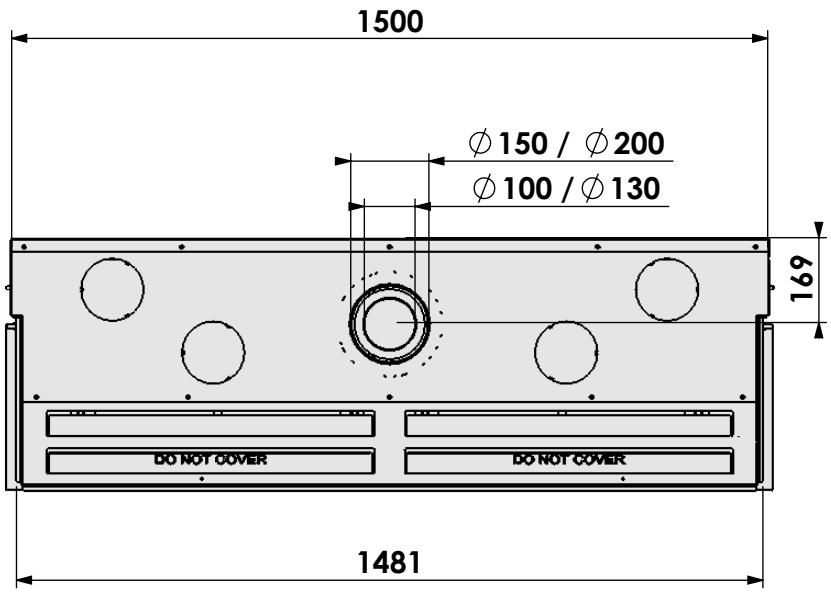

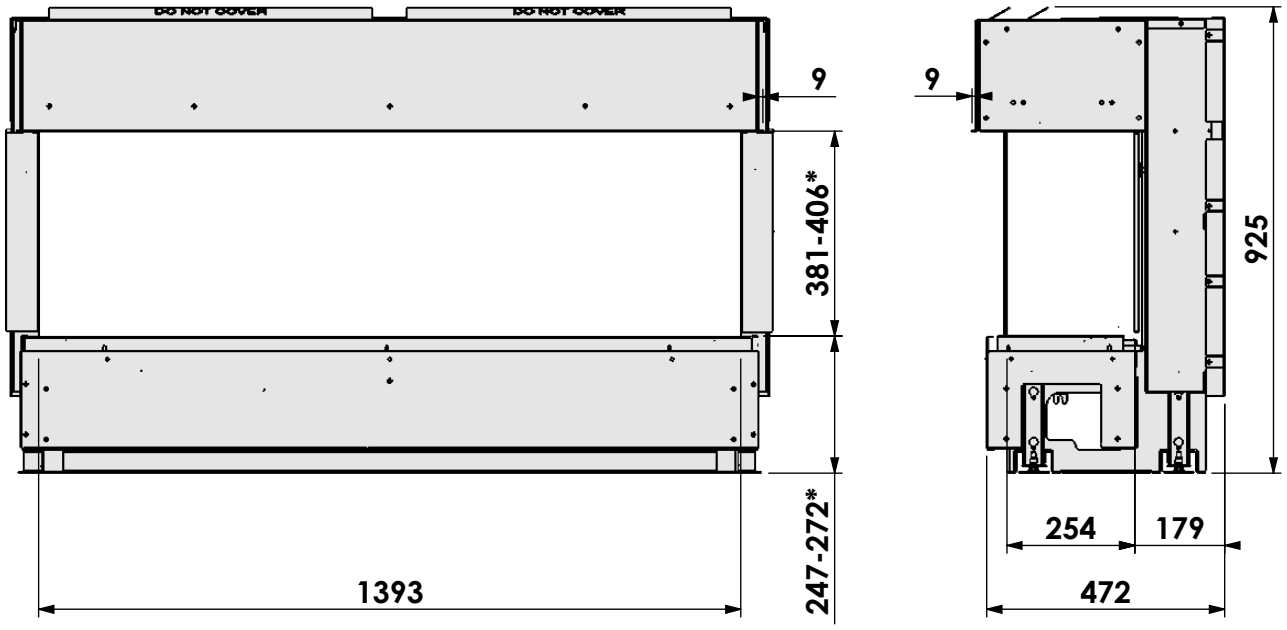

*Adjustable

Kaderloos cm met convectiekast
Frameless with convection housing
Sans cadre avec caisse convection
Ohne Rahmen mit konvektion Kasten

barbas.
Barbas Bellfires B.V.
Hallenstraat 17
5531 AB Bladel
The Netherlands
www.barbasbellfires.com

Name: Barbas Gas Panorama 140-40

Modifications reserved

Projection: American

Scale: 1:10

Unit: mm

Version: 0